ITEM NUMBER	QUANTITY	NAME	PART NUMBER	COMMENTS
1	1	BODY FOR PULL-UP	4420	
2	1	CARTRIDGE 35 MM	1009	
3	1	NUT	4054	
4	1	CAP	4053	
5	1	HANDLE	4415NL	
6	1	SCREW	1885	
7	1	KNOB	1270	
8	1	BASE	4419	
9	1	O-RING	3.53X47.22	
10	1	RUBBER WASHER	002-048-034-002	
11	1	PLASTIC TRIANGLE	3109	
12	1	METAL WASHER	2258	
13	1	NUT	2559	
14	2	INLET HOSE	4450	RUNNER
15	2	DIVERTER HOSE	4436	RUNNER
16	1	DIVERTER	4427	RUNNER
17	1	SPECIAL NIPPLE FOR SHUT OFF	4462	RUNNER
18	1	SCREW	4422	ST.STEEL
19	1	LOWER PLASTIC RING	4421	POM
20	2	O-RING	1.78X4936	
21	1	UPPER PLASTIC RING	4414	POM
22	1	SPOUT PULL-UP	4417	
23	1	INSERT	4413	POM
24	1	SHUT-OFF JET	4411	POM
25	1	UNIVERSAL HOSE	4430	RUNNER
26	1	CONNECTION HOSE-DIVERTER	4432	RUNNER
27	1	AERATOR	4936	
28	1	COUNTER WEIGHT	4578	
29	1	SHANK	3779	
30	1	NIPPLE FOR SPOUT	4447	
31	1	O-RING	1.78x11.11	
32	1	O-RING	1.78x44.17	
33	1	O-RING	2x9	

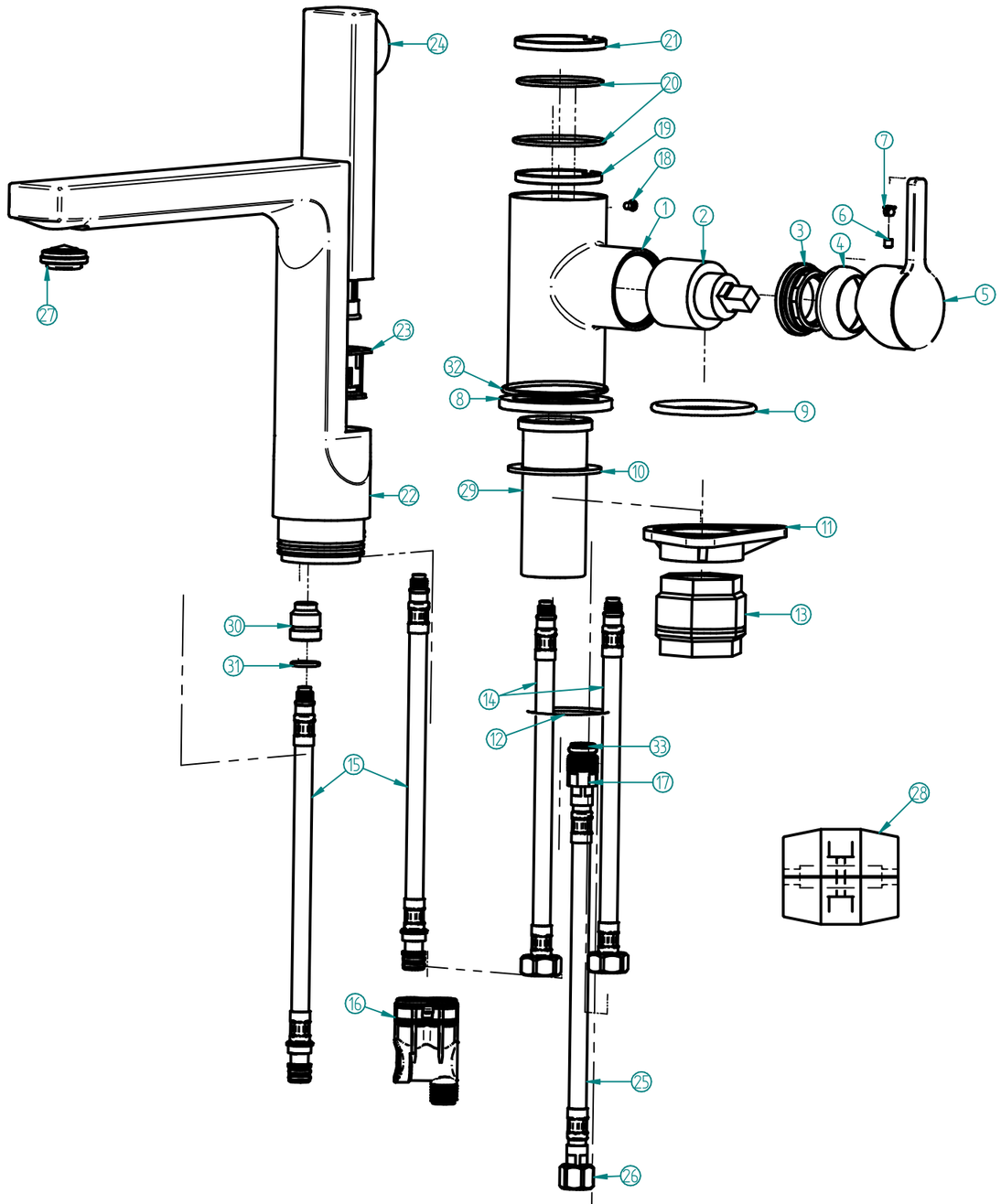

\\HAMAT-APP\cimatron\shlomo\udd\ANGELETTIRUZZA\HAMAT DRAWINGS\PULL-UP\304460_A02.dft

NO.	TITLE				.000 kg	
		QTY.	MAT.	DIMENSIONS	WEIGHT	NOTES
DRAWN	24.06.17 SHLOMO	HAMAT SANITARY FITTINGS & CASTINGS LTD.				SHEET 1
CHECKED						
APPR.						SHEETS 1
SCALE	REF. ASSEMBLY	GENERAL TOLERAN.±0.2		304460_80	304460	REV A00